CHAPTER 10

Mobile Communication Systems

10.1 Introduction

A wireless system implies support for subscriber mobility by the communication infrastructure, and such movement includes that not only from one cell to another but also from the cell's mobile switching center (MSC) and areas controlled by other service providers. In an ideal situation, any MS should be able to communicate with the rest of the world by accessing local wireless infrastructure facilities. Therefore, handoff and roaming among cells and MSCs that are serviced by the same service provider or different service providers needs to be supported. In this chapter, we consider handoff schemes, allocation of resources, and routing in the backbone network as well as security considerations in wireless networks.

10.2 Cellular System Infrastructure

A cellular system requires a fairly complex infrastructure. A generic block diagram built on our earlier discussions in previous chapters is shown in Figure 10.1. Each BS consists of a base transceiver system (BTS) and a BS controller (BSC). Both tower and antenna are part of the BTS, and all associated electronics are contained in the BTS. The authentication center (AUC) unit provides authentication and encryption parameters that verify the user's identity and ensure the confidentiality of each call. The AUC protects network operators from different types of frauds and spoofing found in today's cellular world. The equipment identity register (EIR) is a database that contains information about the identity of mobile equipment. Both AUC and EIR can be implemented as individual stand-alone units or as a combined AUC/EIR unit. The home location register (HLR) and visitor location register (VLR) are two sets of pointers that support mobility and enable the use of the same cell phone number (or mobile phone) over a wide range. The HLR is located at the MSC where the MS is initially registered and is the initial home location for billing and access information. In simple words, the mobility of MS support

Copyright 2011 Cengage Learning. All Rights Reserved. May not be copied, scanned, or duplicated, in whole or in part.

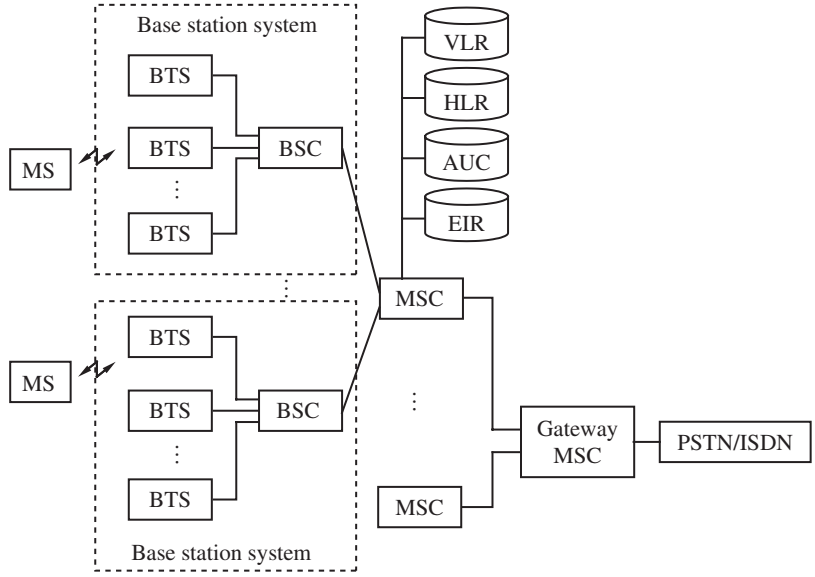

Figure 10.1
A detailed block diagram of a cellular system.

can be explained by a simple and well-known example of post offices forwarding the mail. If someone moves, he or she informs the post office serving the old location about the new address (and hence the new serving post office). This way, all mail coming to the old post office serving the prior location is forwarded to the new post office taking care of mail for the current address so that it can be delivered to the current address of the person. This is equivalent to one-way pointer and redirection. Such a scenario is illustrated in Figure 10.2. In the post office system, there is no use for having a backward pointer from the new post office to the old one. In a similar way, in a cellular system, two-way pointers are established using HLRs and VLRs. Any incoming call, based on the calling number, is directed to the HLR of the home MS where the MS is registered (similar to the old post office). The HLR then points to the VLR of the MSC where the MS is currently located (similar to the new serving post office). The VLR contains information about all

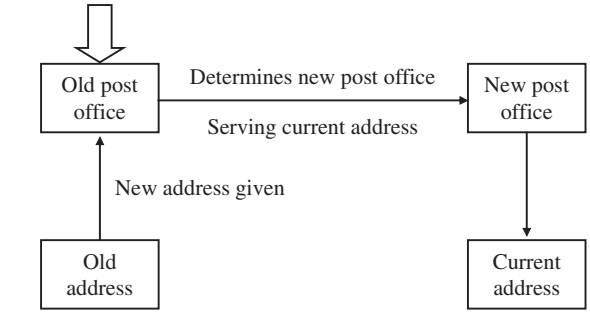

Figure 10.2
Classical mail forwarding done by mail service.

Copyright 2011 Cengage Learning. All Rights Reserved. May not be copied, scanned, or duplicated, in whole or in part.

MSs visiting that particular MSC and hence points to the HLR of the visiting MSs for exchanging related information about the MS. Such a pointer allows calls to be routed or rerouted to the MS, wherever it is located. In cellular systems, a reverse-direction pointer is needed that allows traversal of many control signals back and forth between the HLR and VLR (including billing and access permissions maintained at the home MSC); such bidirectional HLR–VLR pointers help in carrying out various functionalities, as illustrated in Figure 10.3, and are more versatile than unidirectional pointers used in a post office setup. In the next section, we discuss how these pointers between HLR–VLR pairs are automatically set during the initial phase of roaming.

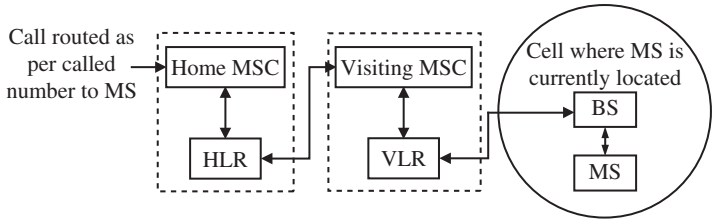

Figure 10.3
Redirection of a call to MS at a visiting location.

This works very well if the destination MS has moved from one cell to another. If a call is initiated from a residential telephone, the call is forwarded through the backbone network to the gateway closest to the home MSC where the MS being called is registered. Thereafter, a similar routing enables connection to the MS. In the same way, a reverse path connection can be established (i.e., from a MS to a home telephone subscriber).

As indicated earlier, the home MSC also maintains access information about all MSs registered, including state of the MS (active/nonactive), type of allowed service (local and/or long distance calls), and billing information (past credit, current charges, chronological order of calls made and timings of each call, etc.). For simplicity of understanding, we have described a simple control mechanism of forwarding calls to a MS in a visiting area.

Such call forwarding works very well if the MS has moved from the registered sector of a cell to another sector within the cell, or within the area controlled by either the same BSC or the same MSC. For these cases, the redirection mechanism shown in Figure 10.3 is adequate. This would work even if the home MSC is different from the visiting MSC, as long as the two MSCs have information about how to forward messages to each other. Mobility can also be supported in an unknown territory as long as there is a mechanism in place to reach the intended destination. A complex forwarding scheme for this is discussed in a later section.

10.3 Registration

The MSs must be registered at one of the MSCs for successful operation of numerous system functionalities. This is maintained not only for billing, but also for

Copyright 2011 Cengage Learning. All Rights Reserved. May not be copied, scanned, or duplicated, in whole or in part.

authentication and verification, as well as for access privileges. In addition to this permanent information, the wireless system needs to know whether the MS is currently located in its own home area or is visiting some other area. This enables incoming calls to be routed to an appropriate location and assures desirable support for outgoing calls.

This is done by exchanging signals known as "beacon signals" between the BS and the MS [10.1]. BSs periodically broadcast beacon signals to determine and test nearby MSs (see Figure 10.4). Each MS listens for beacon signals, and if it hears from a new BS, it adds it to the active beacon kernel table. This information is then used by a MS to locate the nearest BS and establish an appropriate rapport to initiate dialogue with the outside world through the BS as a gateway. Some of the information carried by the beacon signals includes cellular network identifier, timestamp, gateway address, ID (identification) of the paging area (PA), and other parameters of the BS.

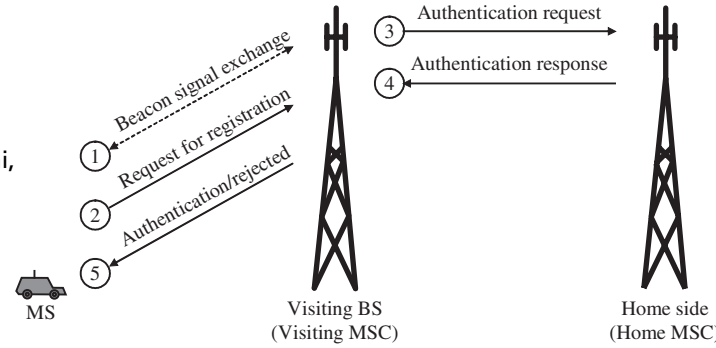

Figure 10.4
Using a mobile phone outside the subscription area. From "Beacon Signals: What, Why, How, and Where," by S. Gerasenko, A.A. Joshi, S. Rayaprolu, K. Ponnavaikko, and D.P. Agrawal, 2001. *IEEE Computer*, 34, pp. 108–110. Copyright 2001 IEEE.

The following steps are used by MSs outside their own subscription areas:

1. A MS listens for new beacons, and if it detects one, it adds it to the active beacon kernel table. If the device determines that it needs to communicate via a new BS, kernel modulation initiates the handoff process.
2. The MS locates the nearest BS via user-level processing.
3. The visiting BS performs user-level processing and determines who the user (MS) is, the user's registered home site (MSC) for billing purposes, and what kind of access permission the user has.
4. The home site sends an appropriate authentication response to the BS currently serving the user, which is stored in the corresponding VLR of the serving MSC (two-way pointers between HLR–VLR pairs).
5. The BS at the visited location approves or disapproves user access.

In the United States, these signals are transmitted in the Advanced Mobile Phone System (AMPS) and the Cellular Digital Packet Data (CDPD) system.

Copyright 2011 Cengage Learning. All Rights Reserved. May not be copied, scanned, or duplicated, in whole or in part.